AMA-IE2 112 M4

AMTECS

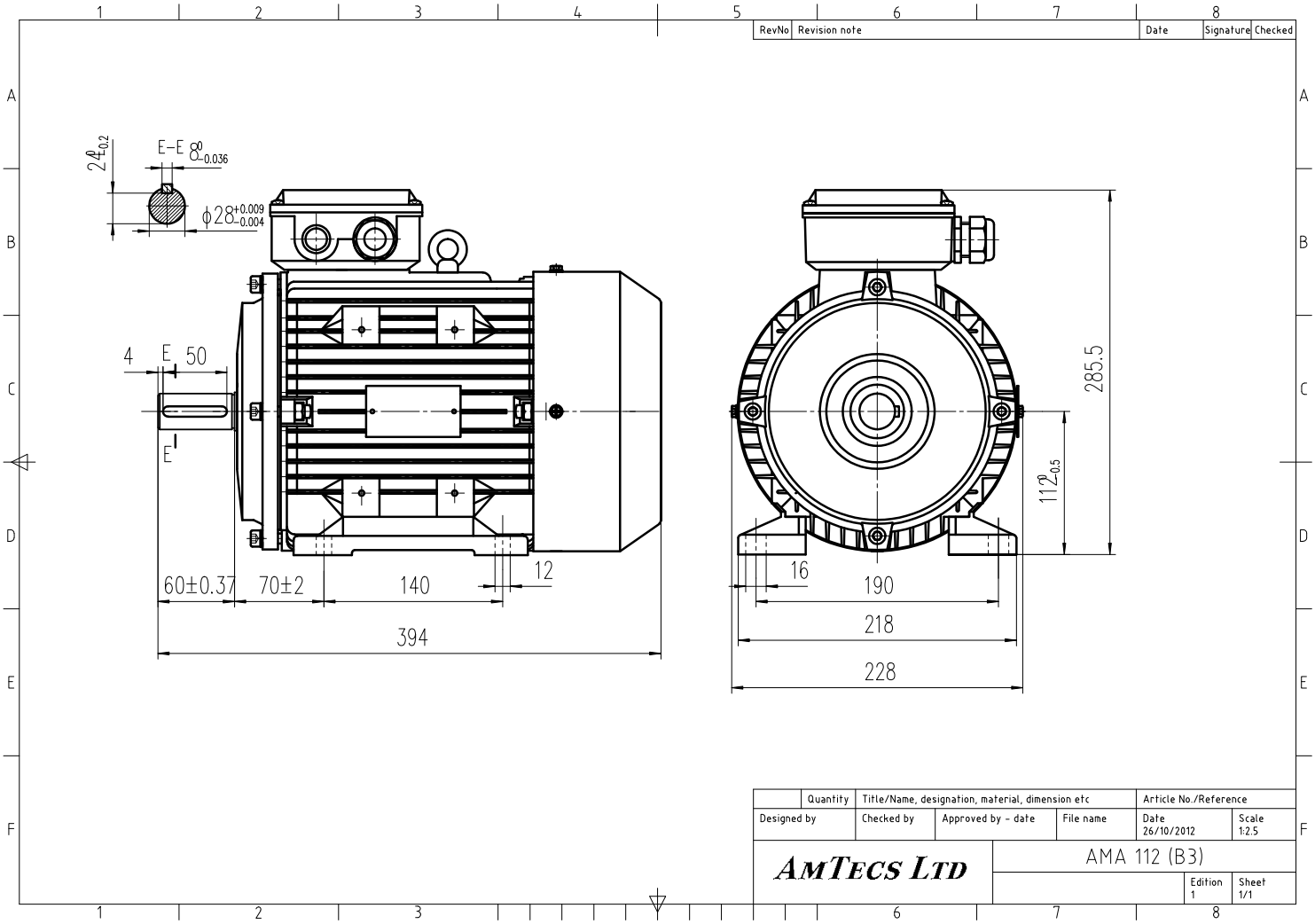

Specification	**IEC 60034-1**	Efficiency class	**IE2**
Manufacturer	**AmTecs**	Load data	100%
Motor type	**AMA-IE2 112 M4**	Efficiency	**86.6** %
Rated power	**4** kW **S1** Duty	Power factor	**0.82**
Speed	**1445** rpm	Sound pressure level (1m)	**58** dB(A)
Voltage	**400V / 690V**	Resistance R20 (open)	
Frequency	**50** Hz	Resistance R20 (Delta)	
Connection	**Delta / Star**		
Full load current	**8.12 A / 4.69 A**	Full load torque	**26.4** Nm
No-load current		Starting / Full load torque	**3.5**
Enclosure	**IP55**	Pull up / Full load torque	
Insulation class	**F (temp. rise B)**	Pull out / Full load torque	**4**
Max. ambient temp	**40** °C		
Max. altitude	**1000** mtr above sea level		
Comment			
Cable entry	**M25 x 1.5**	Starting / Full load current (DOL)	**7.5**
Construction	**Aluminium**	Starting / Full load current (Y/D)	
Weight	**42** Kg	Rotor Inertia	
Type number		Bearing DE	**6306**
Warranty		Bearing NDE	**6306**

Electric Motors And Gearboxes Ltd
103 Morgan Close
Willenhall
West Midlands
WV12 4LH
01902 601403
sales@emag-ltd.co.uk

EMAG ELECTRIC MOTORS AND GEARBOXES LTD

www.emag-ltd.co.uk

We make all efforts to better our products. Versions, technical data and figures could be changed therefore. They are not binding before written confirmation.